Shigshop
Zwift speaker cabinets

Notes:
- Stock .5" thick
- Glue and clamp
- Install terminals on back panel

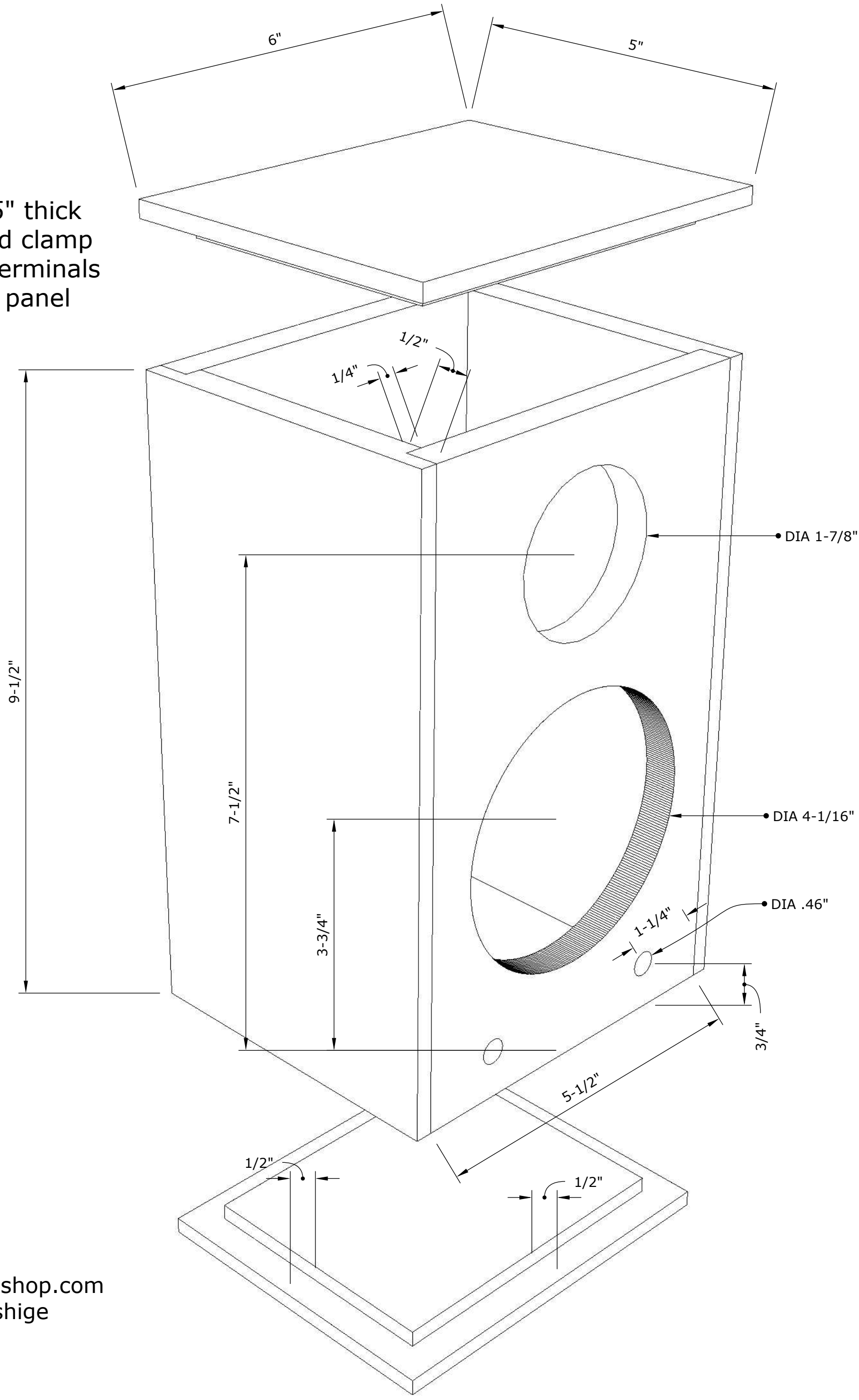

copyright
2020 Shigshop.com
Tim Murashige